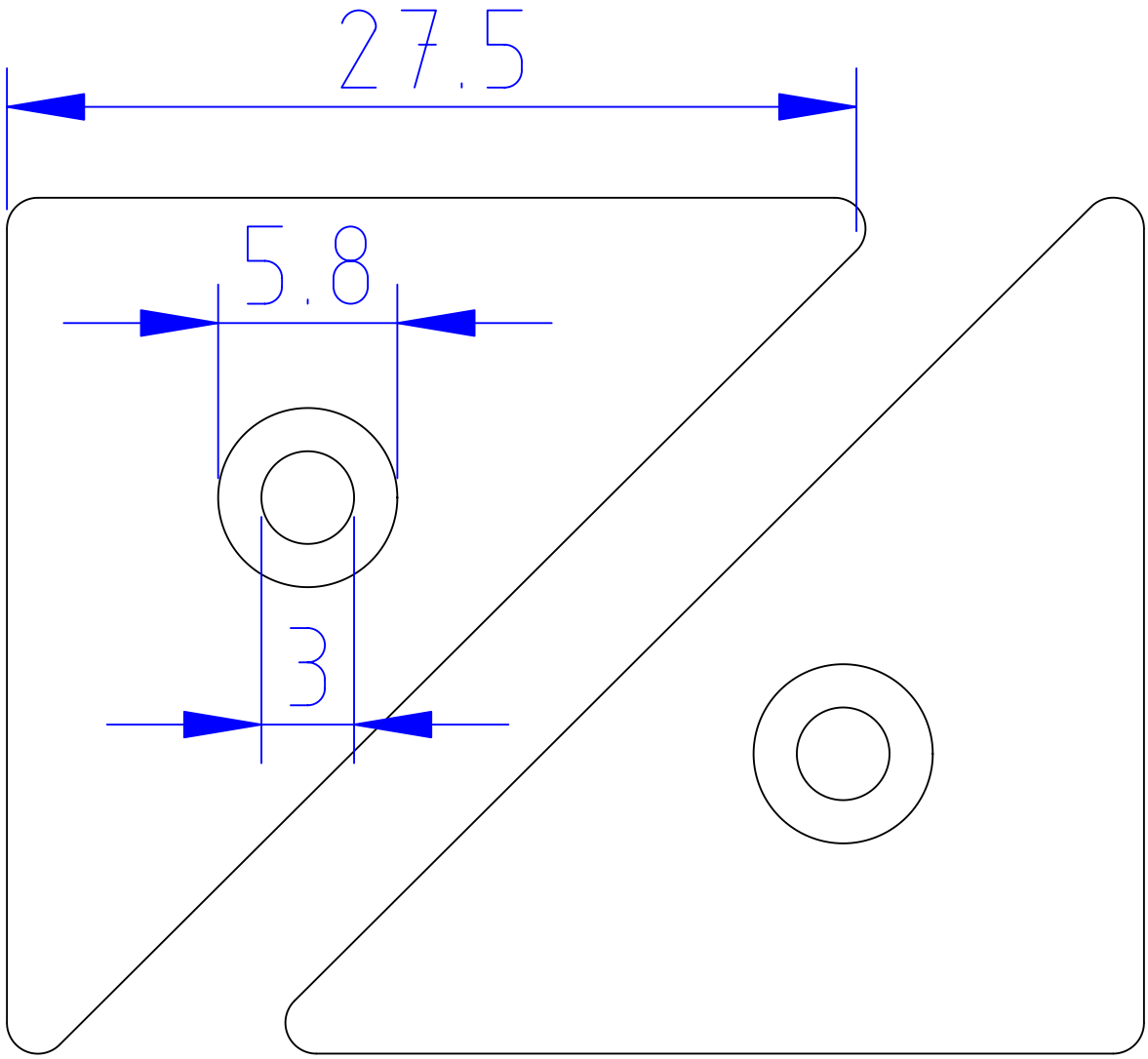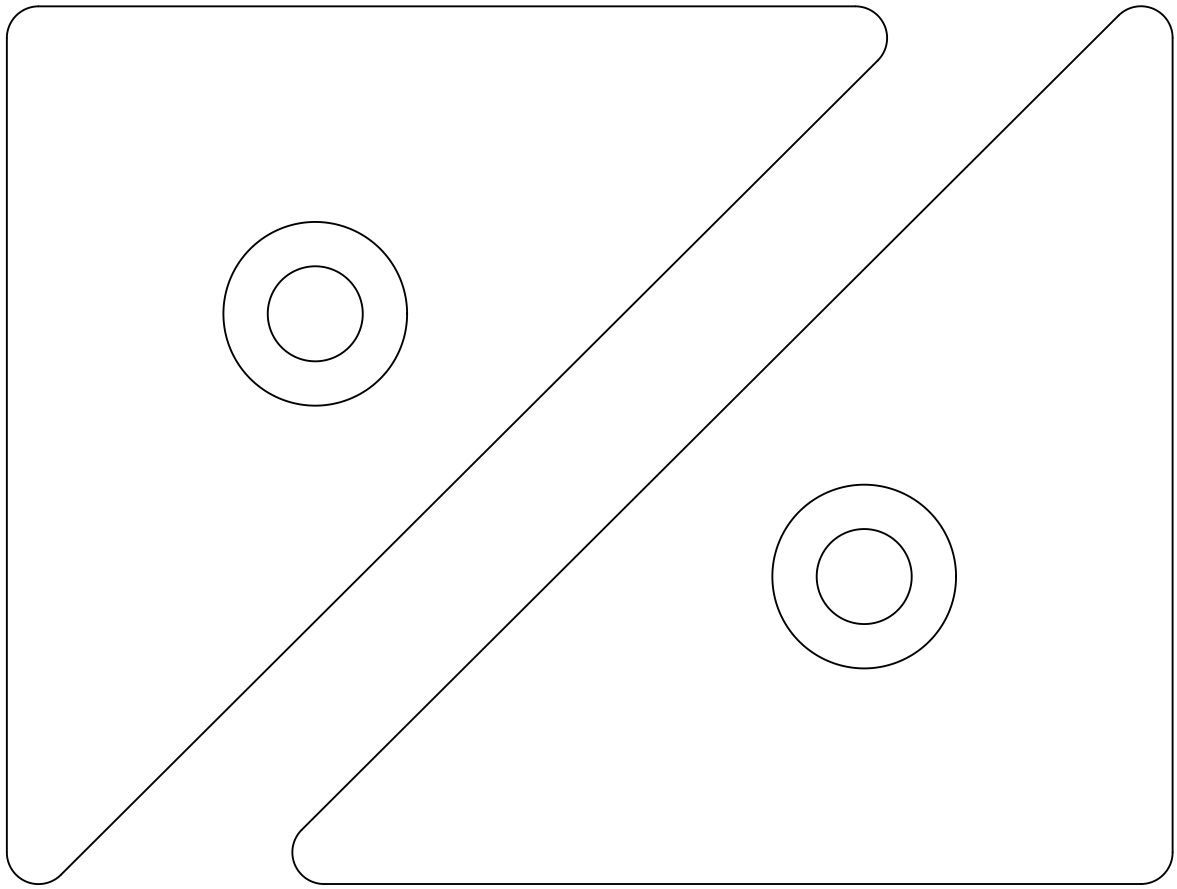
27.5
5.8
3